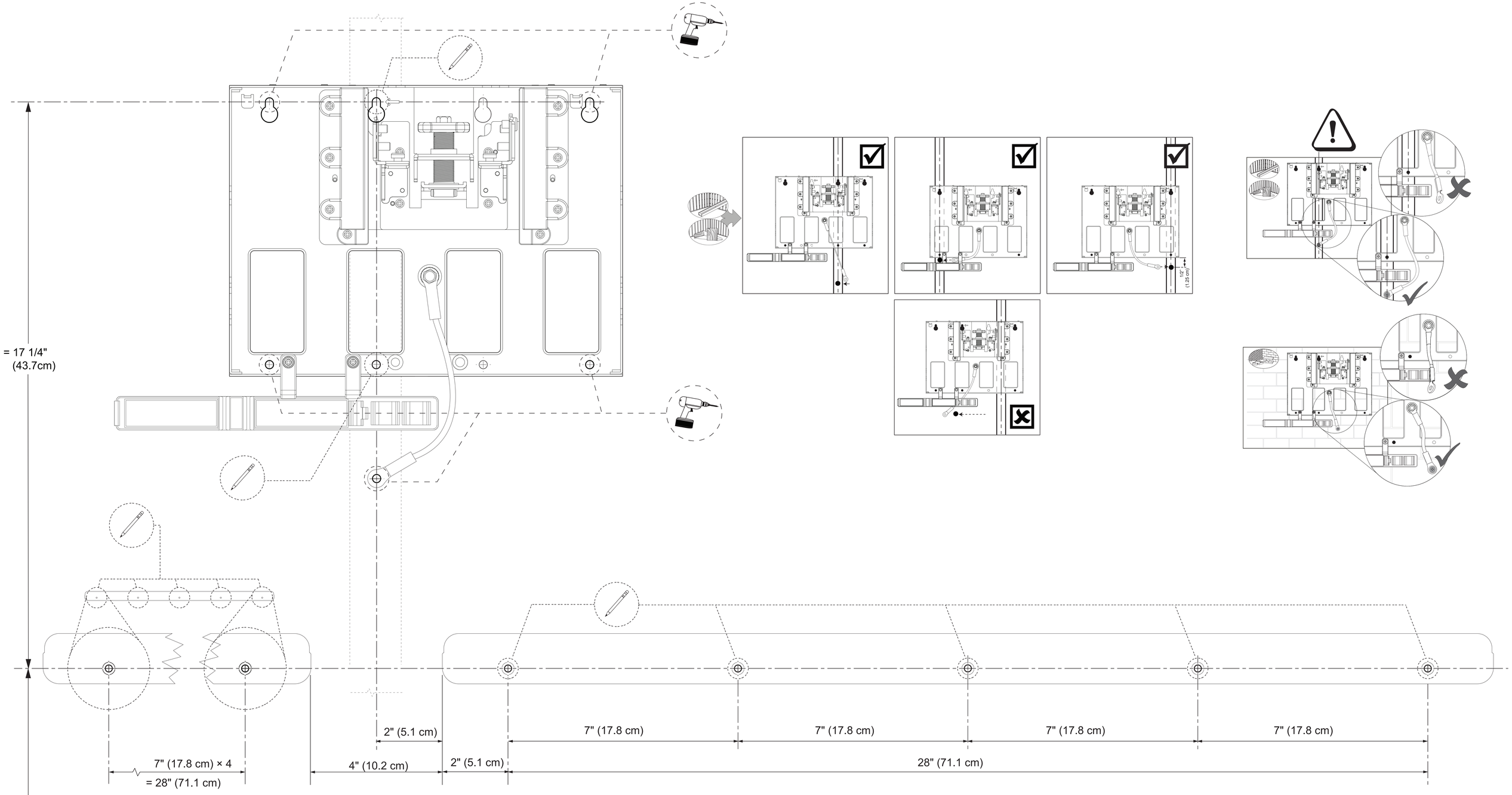

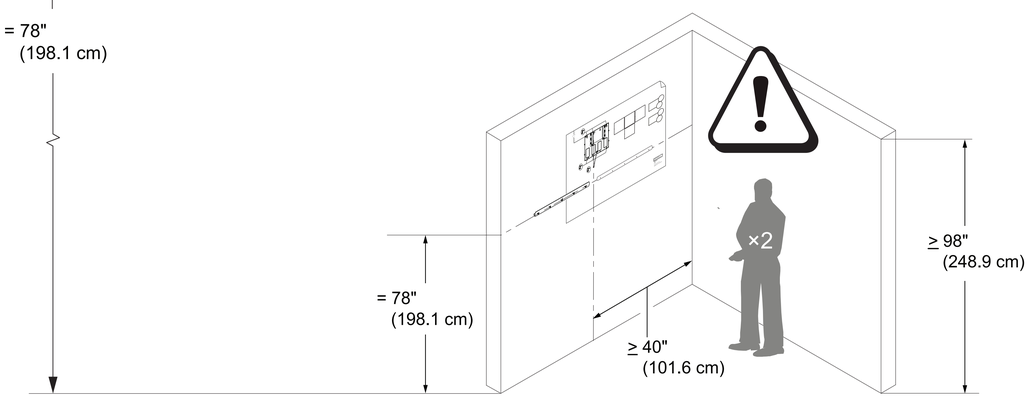

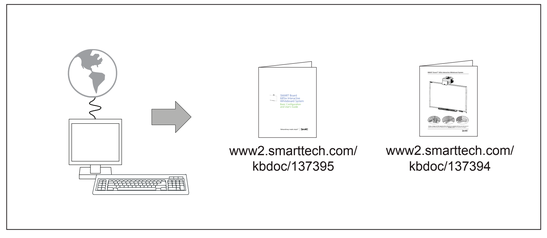

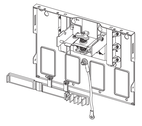

Installation Template for the UX60 Projector System

Part of the SMART Board™ 685ix Interactive Whiteboard System

www.smarttech.com/support www.smarttech.com/contactsupport
Support: +1 403.228.5940 or Toll Free 1.866.518.6791 (U.S./Canada)

© 2009 SMART Technologies ULC. All rights reserved. The SMART logo and smarttech are trademarks or registered trademarks of SMART Technologies ULC in the U.S. and/or other countries. All other third-party product and company names may be trademarks of their respective owners. SMART Board 685ix Interactive Whiteboard System Patent No. US6446263; US6141000; US6320597; US6323894; US6337681; US6640306; US6874127; US6874136; US7151533; US7289113; US7499033; CA2058219; and CA2252302. Other patents pending. UX60 Projector System Patent No. US6545386. Other patents pending.

Contents are subject to change without notice. 10/2009.

99-00986-20 REV B0

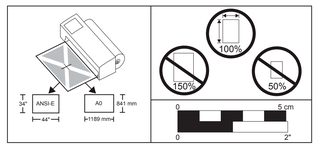

You are permitted to make copies of this document
at 100% scale and distribute the copies for use.